1 (Scale 1:4)	2 (Scale 1:4)	3 (Scale 1:4)	4 (Scale 1:4)
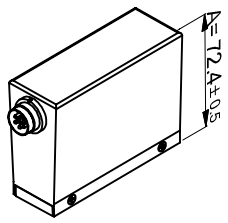	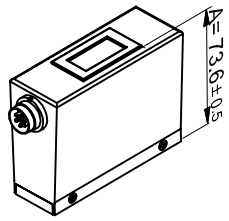	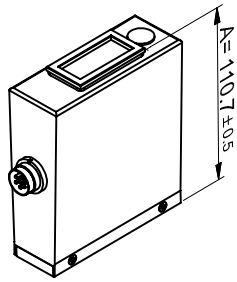	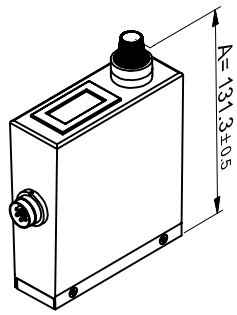
M+W analog case assy	M+W analog case assy with display	M+W analog case assy with V/F convertor	M+W analog case assy including potentiometer

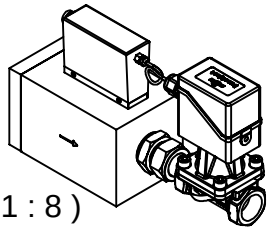

(1 : 8)

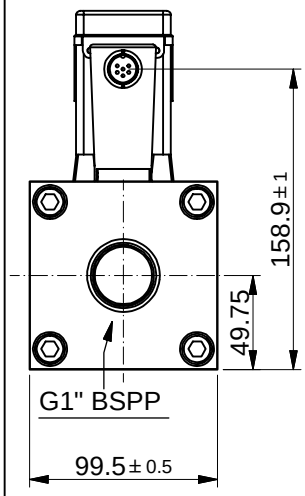

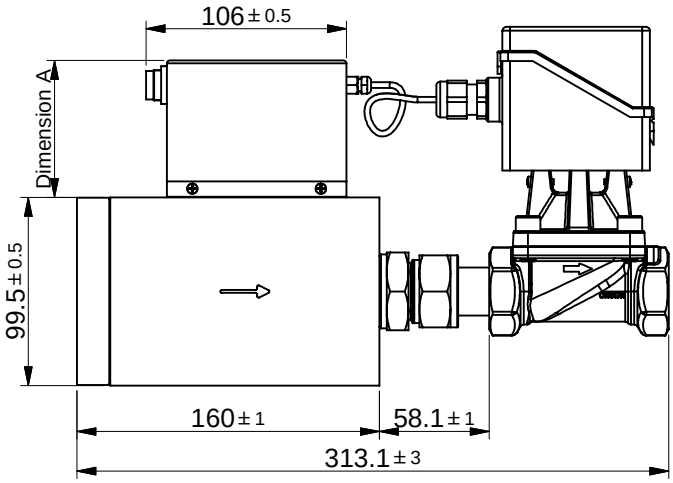

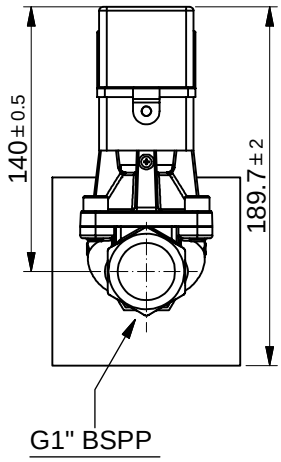

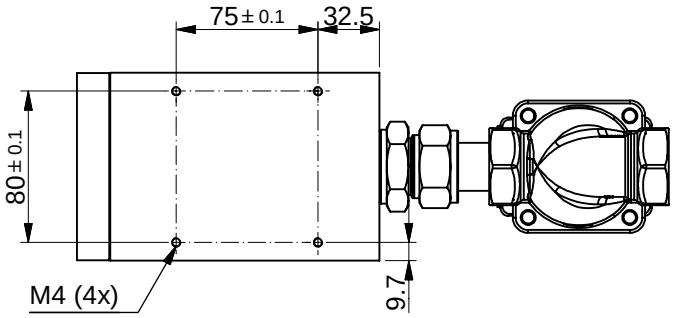

Dimensions subject to change without notice.

Tolerances ±0.2 unless otherwise mentioned

Title: Dimensional drawing M+W D-6291/BJ1"		Drawer : M.B. Date: 20-08-2009	Revision Description: New drawing	
M+W Instruments GmbH	Projection: Third Angle	Checked : Date: 20-08-2009	Was voorheen dc 2009042306. Rev. by: M.B.	Scale: 4:1 A4
WWW.MW-INSTRUMENTS.COM	Dimensions: Metric (mm)	Drawing no.: 7.05.721	Rev.: A	Page: 1-1